GM Tahoe HEV Model Development in PSAT

April 2009
SAE 2009-01-1307

Namdoo Kim, Richard Carlson, Forrest Jehlik, Aymeric Rousseau
Argonne National Laboratory

Sponsored by Lee Slezak

U.S. Department of Energy
Energy Efficiency and Renewable Energy
Bringing you a prosperous future where energy is clean, abundant, reliable, and affordable
This presentation does not contain any proprietary, confidential, or otherwise restricted information

Outline

- **GM Tahoe 2-Mode Hybrid**
- Powertrain Model
- Testing and Data Analysis
- Powertrain Controller
- Validation

Vehicle Specifications

Parameter	Value
Estimated Test Weight	2685 kg
Wheel Radius	0.401 m
Final Drive Ratio	3.08
Planetary gear ratio (Zs:Zr)	0.357:0.69,0.69:1.357,0.505:1.357
Motor Peak Power/Torque	60kW/307 Nm @ 1865 RPM
Engine	LFA 6.0L V8, cylinder deactivation
Engine Peak Power/Torque	248kW@4500 RPM/526 Nm @ 4370 RPM
Battery	288V, 6.5 Ah, NiMH

2 Motors

3 Planetary Sets

4 Clutches

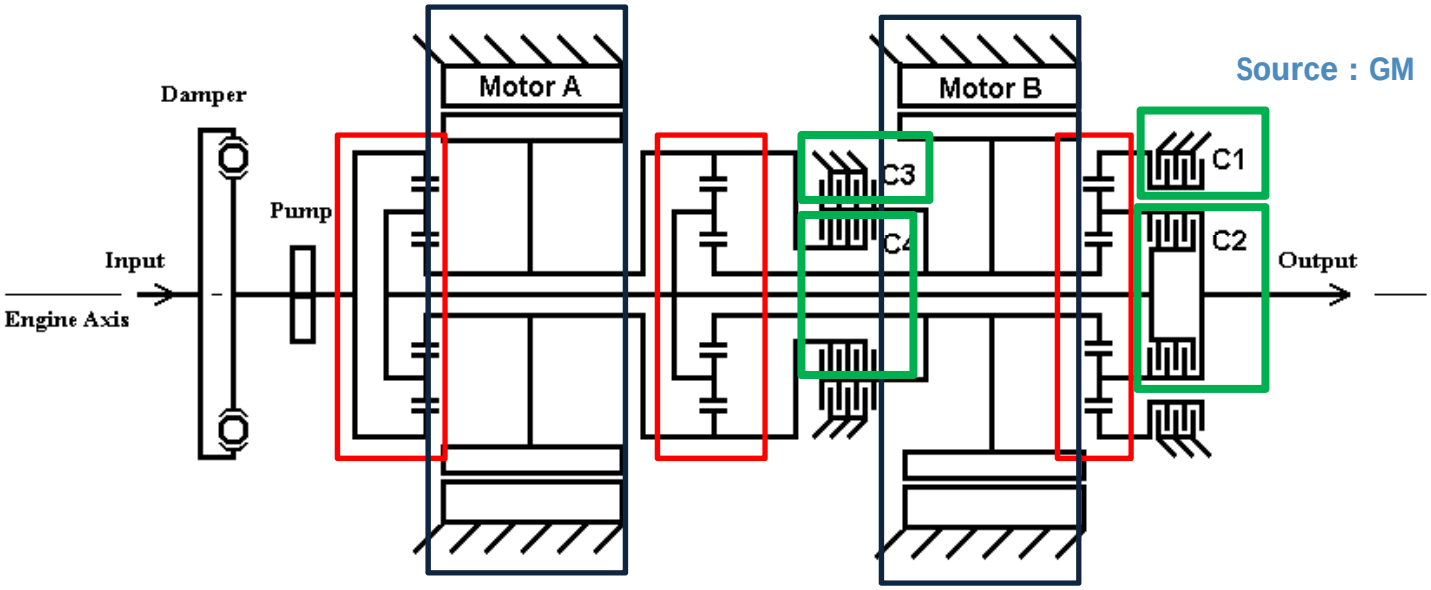

Source : GM

Two-Mode Hybrid Transmission

-**2 EVT modes** instead of one results in 3 mechanical points (1 in input mode, 2 in compound) instead of one:

- Extended operating range
- Reduced electrical path, therefore **better fuel economy**
- Reduced electrical path, therefore **reduced motor power requirements**

- **4 fixed gear modes**:

- Strong towing capacity
- Minimize continuous-duty motor requirements
- Allows lower final drive ratio

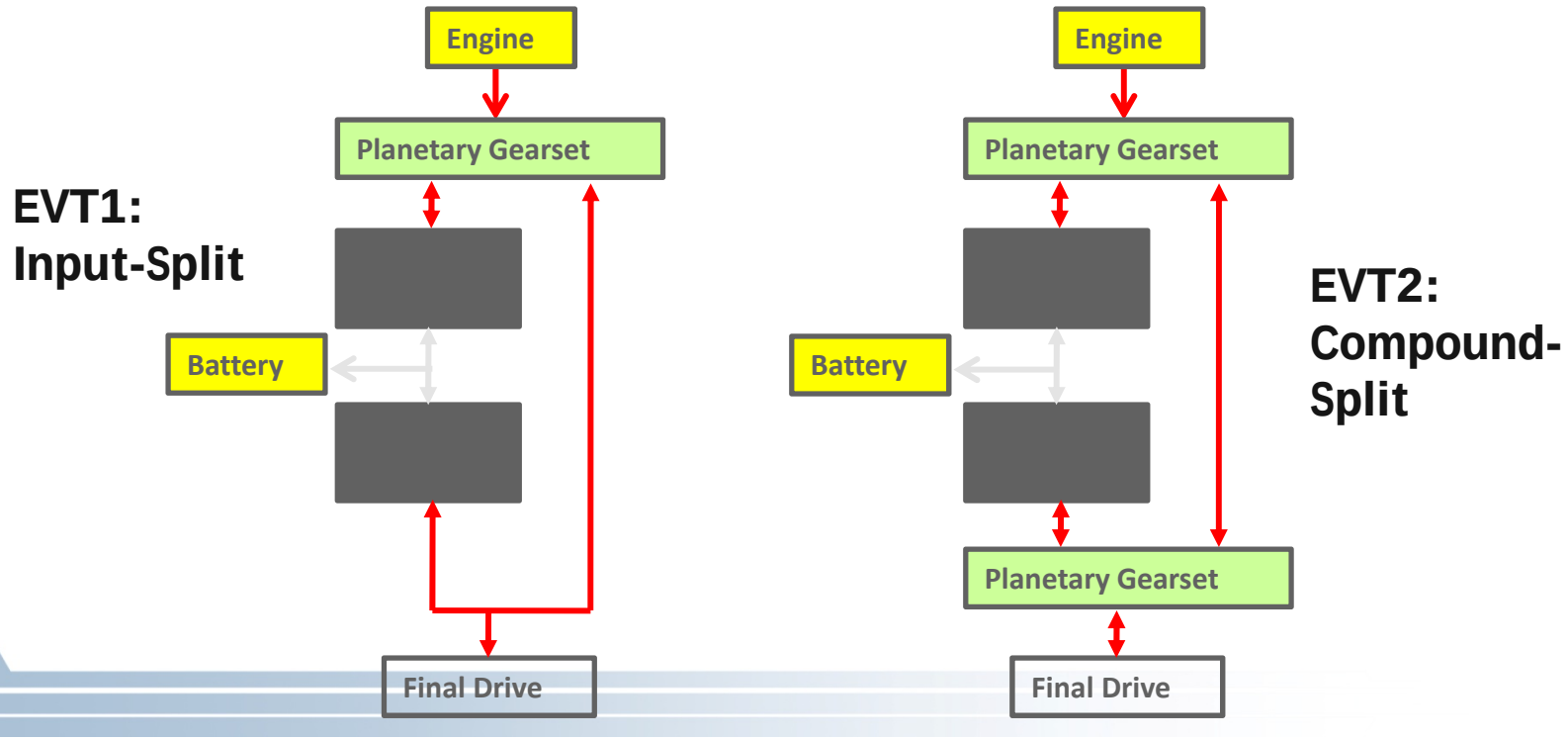

Model Development Process

Testing
✓Instrumentation
✓Data acquisition
✓Component mapping (Engine)

Performed at Argonne's APRF:
- **A**dvanced **P**owertrain **R**esearch **F**acility
- 4WD dynamometer

Quality Analysis
✓Data import in PSAT
✓Individual Sensor Evaluation
✓Sensor comparison
✓Calculation of all missing Efforts/Flow

Analysis & Validation
✓Control Strategy
✓Parameter Tuning

Powertrain Model
✓Equations
✓PSAT model

Argonne NATIONAL LABORATORY

Outline

- GM Tahoe 2-Mode Hybrid
- **Powertrain Model**
- Testing and Data Analysis
- Powertrain Controller
- Validation

Dynamic Equations for Gearbox Model
Example of Mode 1 (Input Split)

Lever Diagram

$$\omega_{MC1} = (1 + Zr3/Zs3)\omega_{OUT}$$

$$T_{MC1} - T_{out}/(1 + Zr3/Zs3)$$

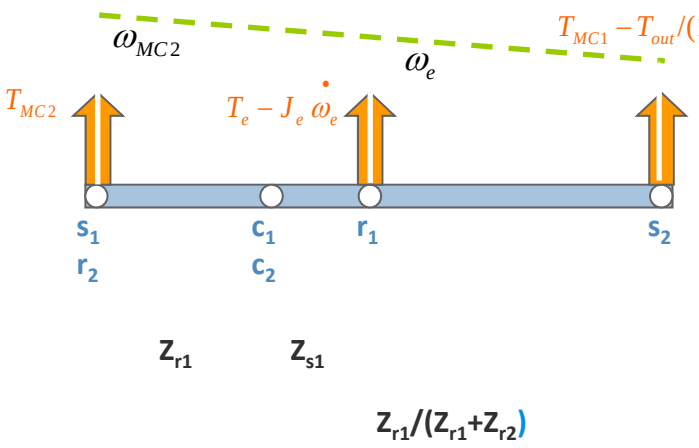

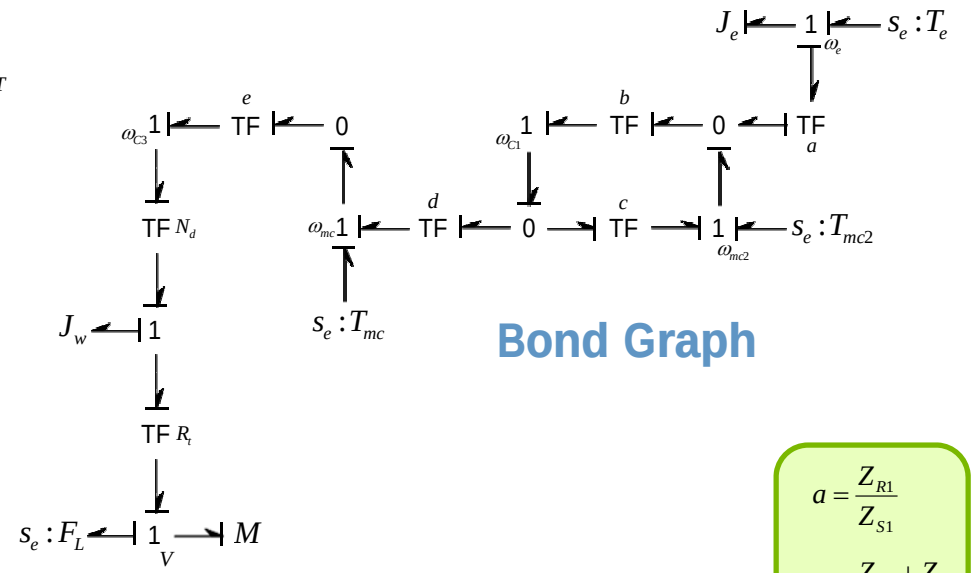

Bond Graph

Output Torque equation

$$T_{OUT} = \frac{bde}{1-bc} \cdot T_{MC2} + e \cdot T_{MC1}$$

Dynamic Speed/Torque equation

$$\dot{\omega}_e = \frac{1}{J_e}\left(T_e - \frac{a}{1-bc} \cdot T_{MC2}\right)$$

Speed equations

$$\omega_{MC1} = e \cdot \omega_{OUT}$$

$$\omega_{MC2} = \frac{bde}{1-bc} \cdot \omega_{OUT} - \frac{a}{1-bc} \cdot \omega_e$$

with

$$a = \frac{Z_{R1}}{Z_{S1}}$$

$$b = \frac{Z_{S1} + Z_{R1}}{Z_{S1}}$$

$$c = \frac{Z_{R2}}{Z_{S1} + Z_{R2}}$$

$$d = \frac{Z_{S2}}{Z_{S1} + Z_{R2}}$$

$$e = \frac{Z_{S3} + Z_{R3}}{Z_{S3}}$$

$$f = \frac{Z_{R3}}{Z_{S3}}$$

Dynamic Equations for Gearbox Model (Other Modes)

Mode 2 (Compound)

$$T_{OUT} = b \cdot T_{MC2} + \frac{1-bc}{d} \cdot T_{MC1}$$

$$\dot{\omega}_e = \frac{1}{J_e}\left(T_e - a \cdot T_{MC2} + \frac{ac}{d} \cdot T_{MC1}\right)$$

$$\omega_{MC1} = \frac{1-bc}{d} \cdot \omega_{OUT} + \frac{ac}{d} \cdot \omega_e$$

$$\omega_{MC2} = b \cdot \omega_{OUT} - a \cdot \omega_e$$

Mode 3-6 (Fixed Gears 1-4)

$$T_{out} = k_e (T_e - J_e \dot{\omega}_e) + k_{MC1} \cdot T_{MC2} + k_{MC2} \cdot T_{MC1})$$

$$\omega_e = k_e \cdot \omega_{OUT}$$

$$\omega_{MC1} = k_{MC1} \cdot \omega_{OUT}$$

$$\omega_{MC2} = k_{MC2} \cdot \omega_{OUT}$$

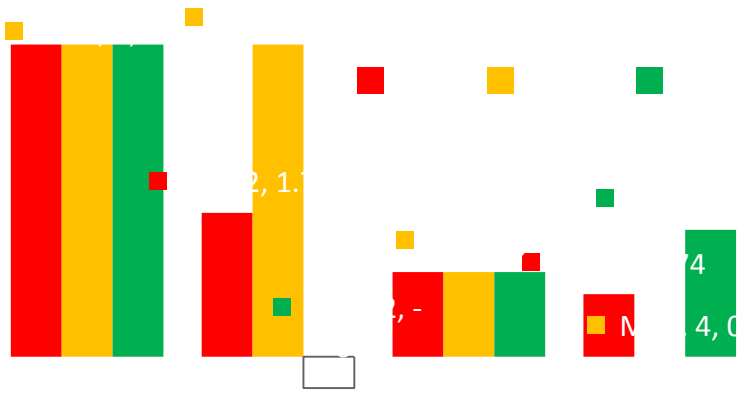

Outline

- GM Tahoe 2-Mode Hybrid
- Powertrain
- **Testing and Data Analysis**
- Powertrain Controller
- Validation

Vehicle Testing

Level 1 Testing: No customized sensors, signals mostly from CAN
Standard Cycles: UDDS, HWY, US06
Speed/Drive aggressiveness: UDDS x0.8, x1, x1.2, x1.4
Trailer Towing
Steady-Speed: various speed, various grades

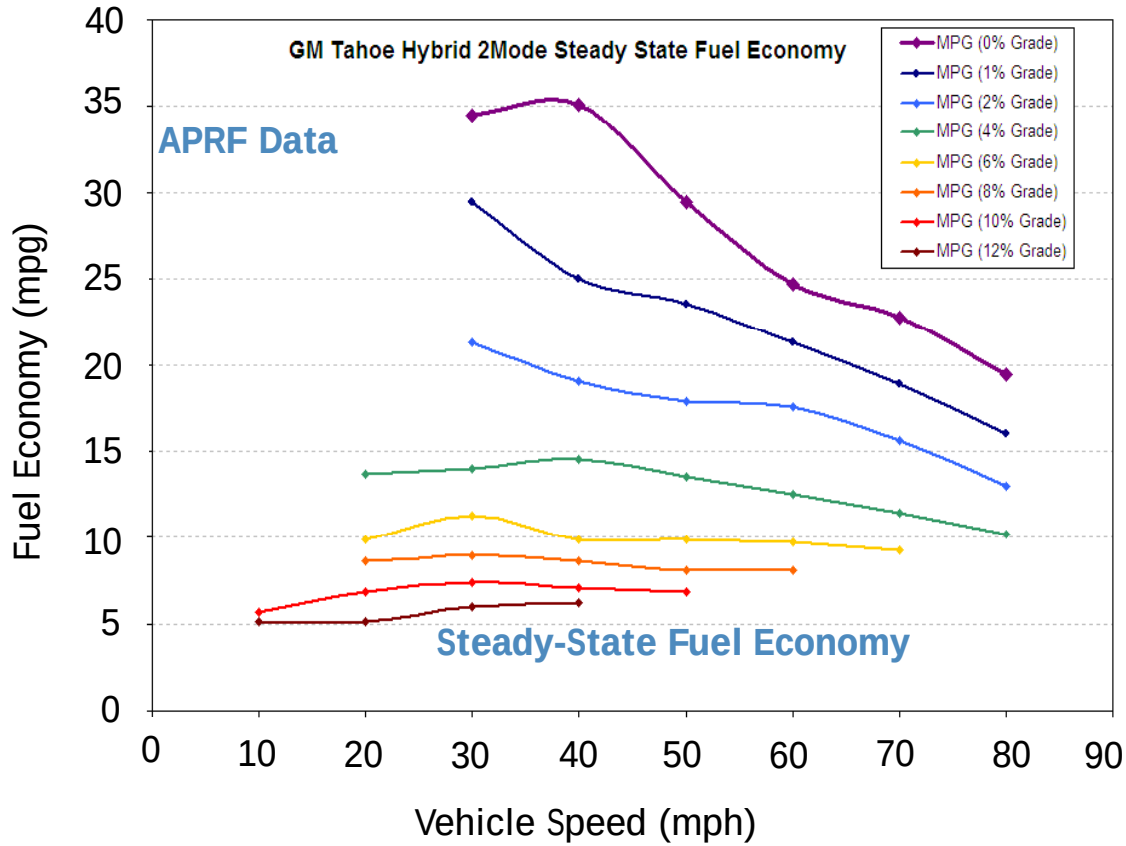

List of signals

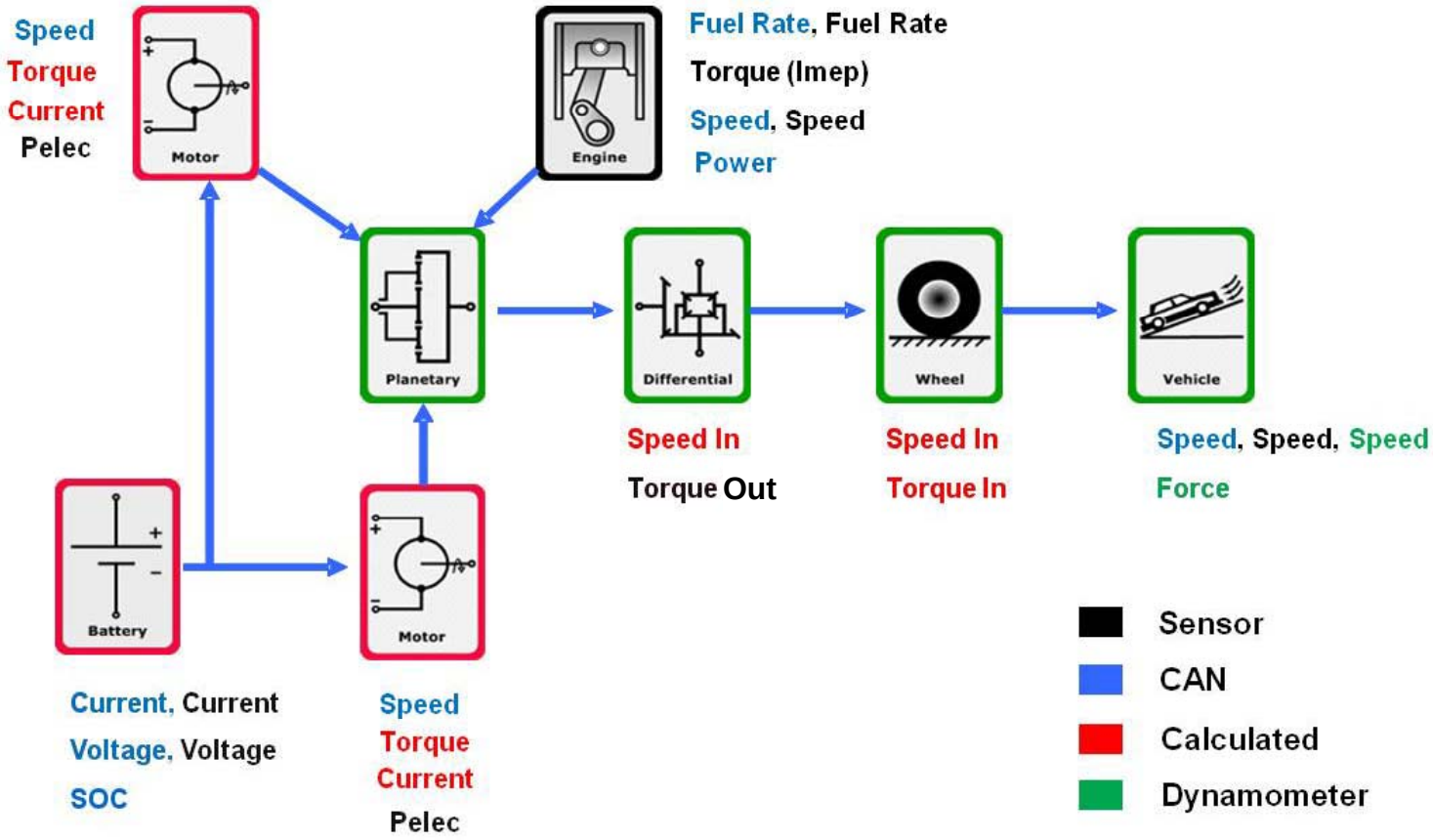

Missing variable calculation

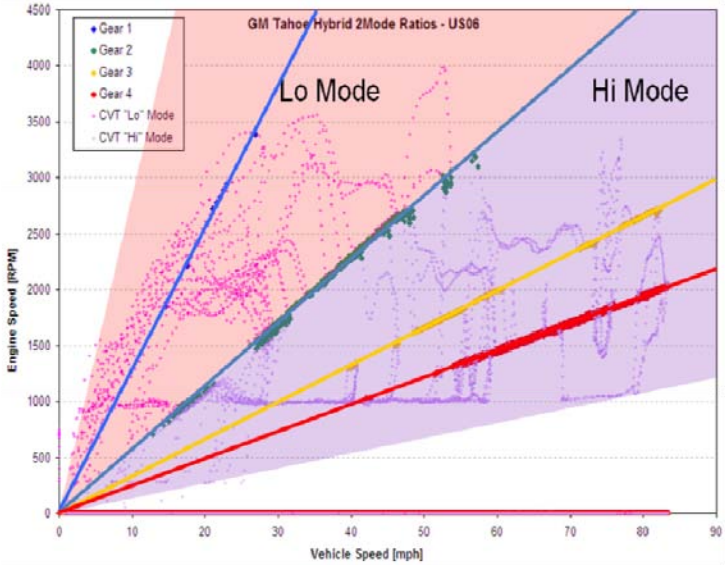

Mode was deducted from engine speed/vehicle speed ratio and speed equation matching

Electric Power Split calculated using motor losses maps

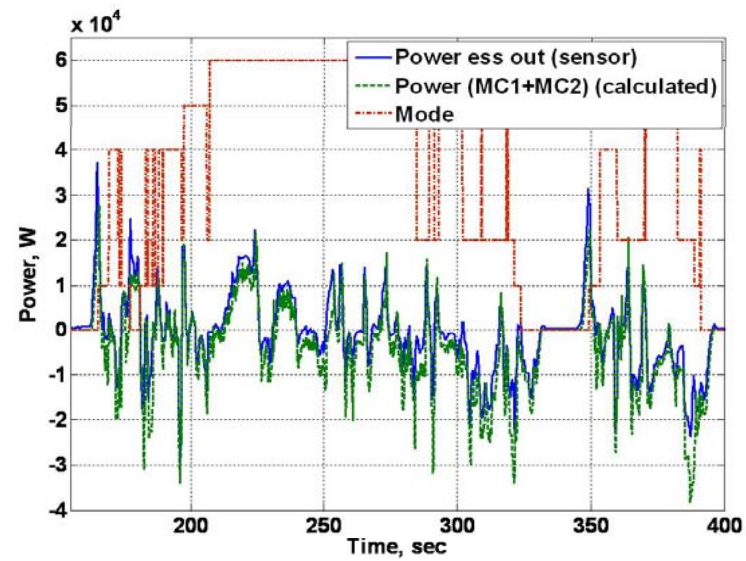

Engine Map Generation

- Response surface methodology applied to experimental data
- Fuel map developed as a function of operating conditions from limited data set

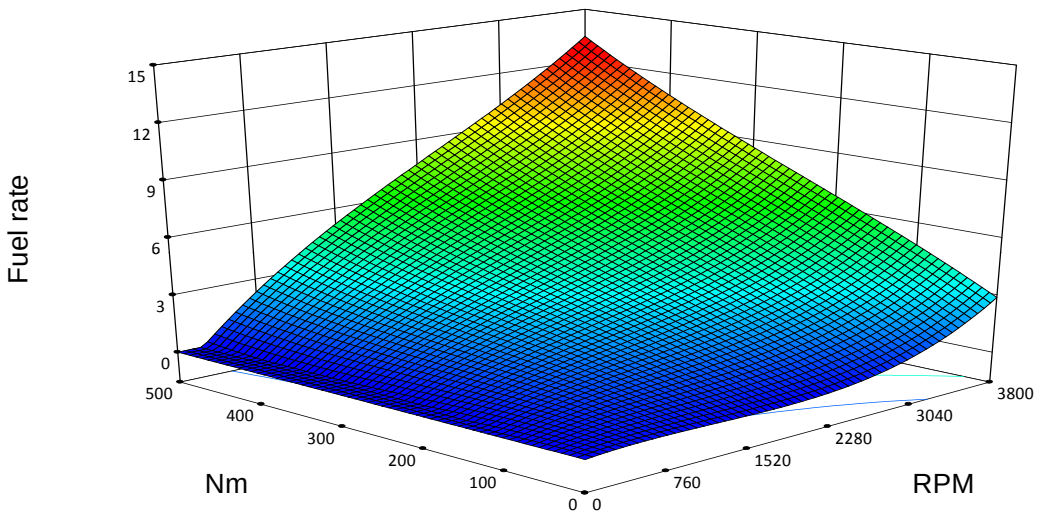

Response surface fueling map

Model predicted vs. actual flowrate
(first 200 seconds of drive cycle comparison)

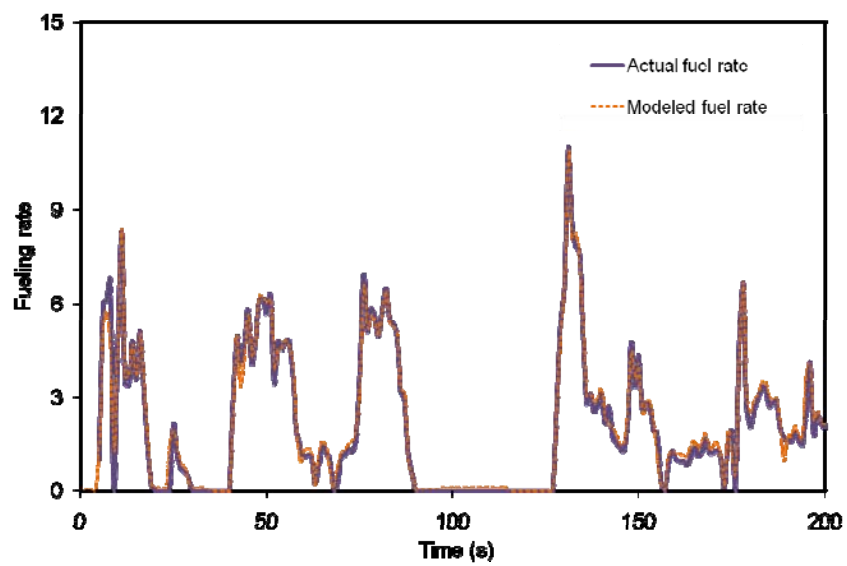

Outline

- GM Tahoe 2-Mode Hybrid
- Powertrain Model
- Testing and
- **Powertrain Controller**
- Validation

Rule-Based Powertrain Controller

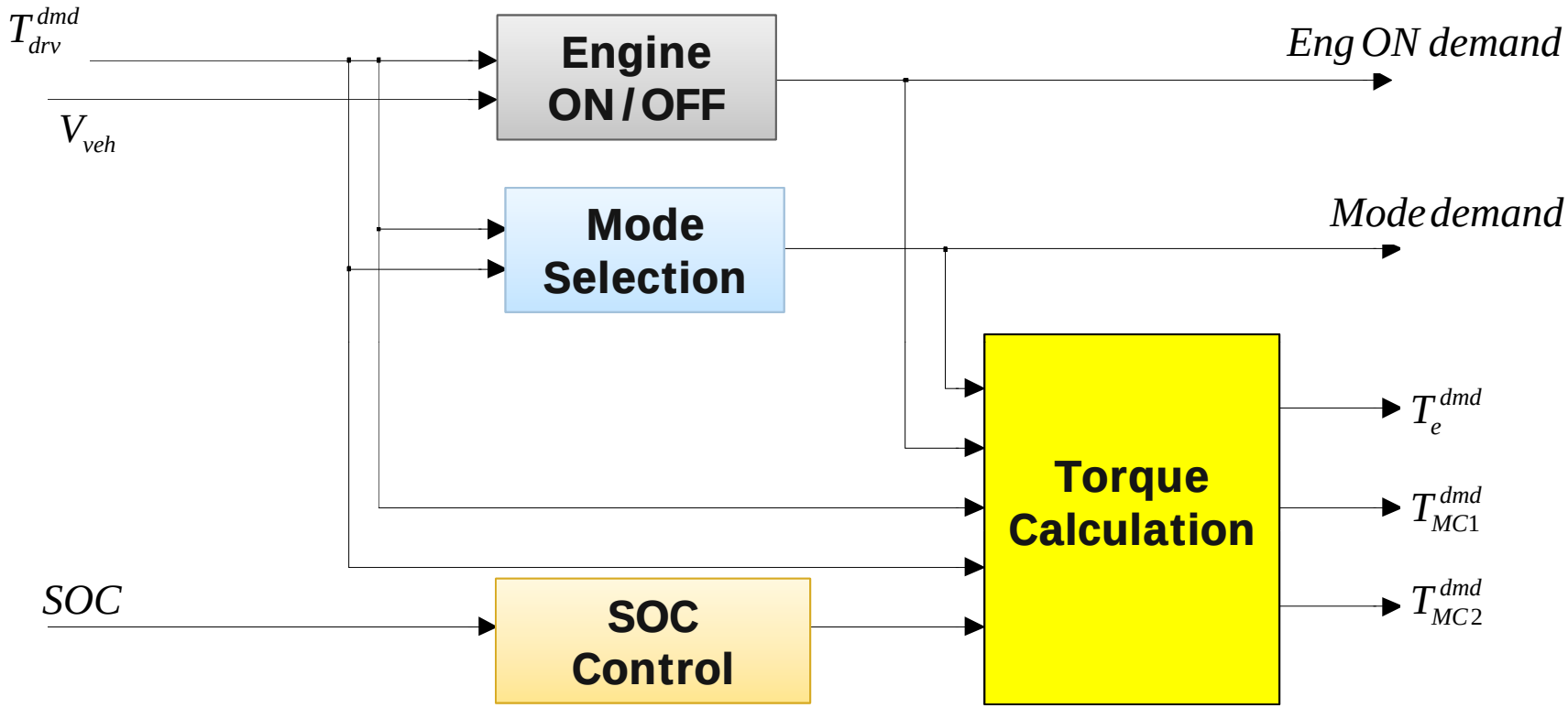

EVT : For a given power demand, engine operates at best efficiency speed
Fixed Gear: For a given engine speed, engine operates at best efficiency torque

Example Of Operation

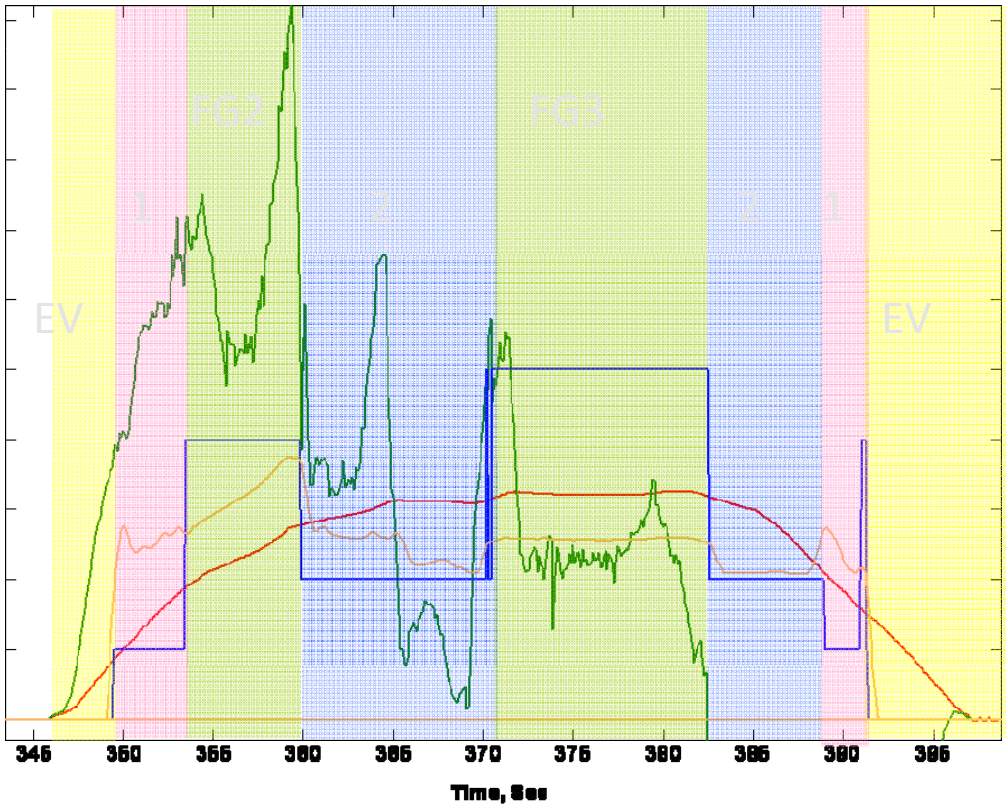

Vehicle speed

Wheel power

Mode

Engine speed

EV mode

Mode 1 (Input)

Mode 2 (Compound)

Fixed Gear (2nd,3rd)

Outline

- GM Tahoe 2-Mode Hybrid
- Powertrain Model
- Testing and Data Analysis
- Powertrain Controller
- **Validation**

Mode Selection Comparison

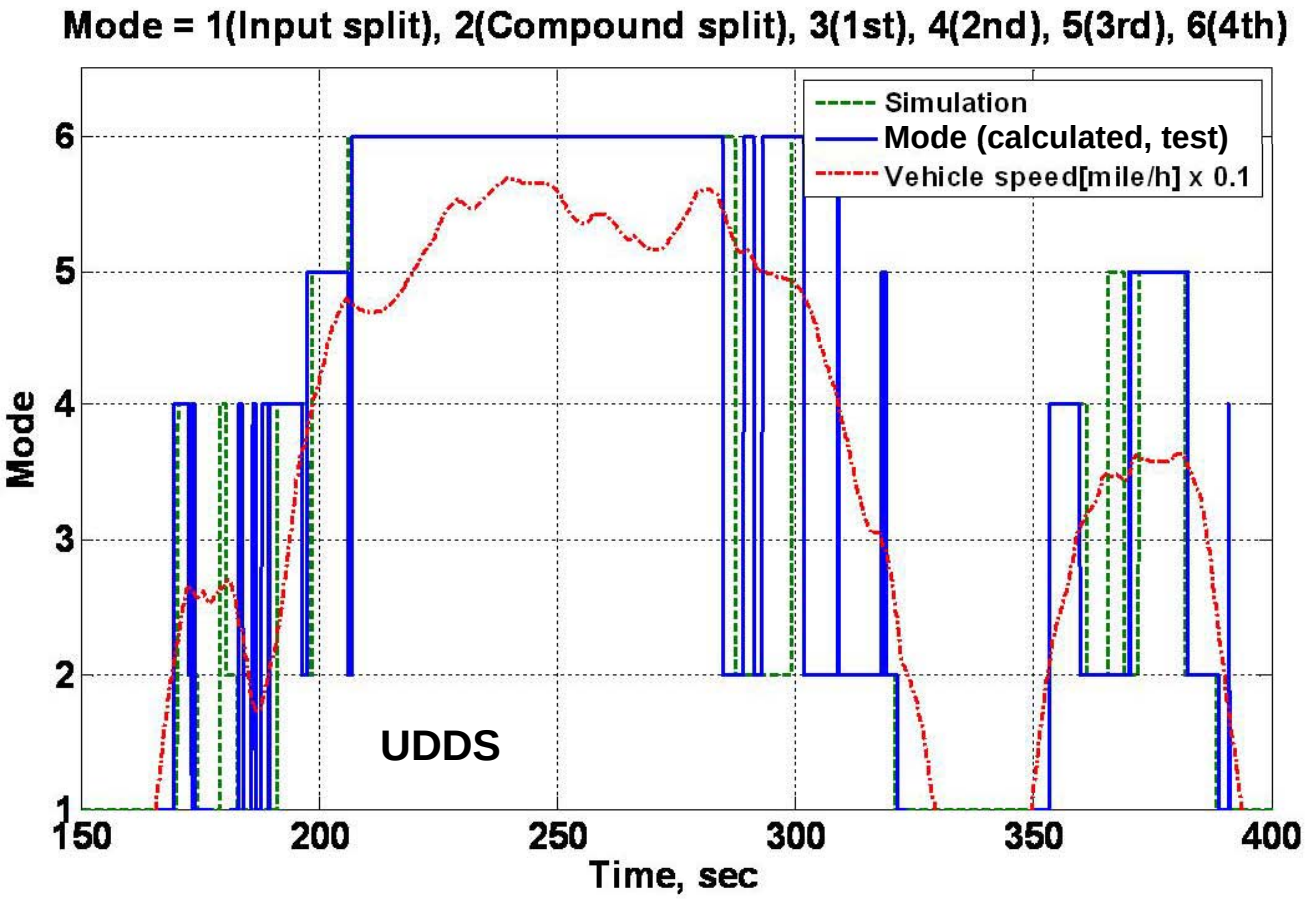

APRF Test Data

Engine Operation Comparison

Engine Speed

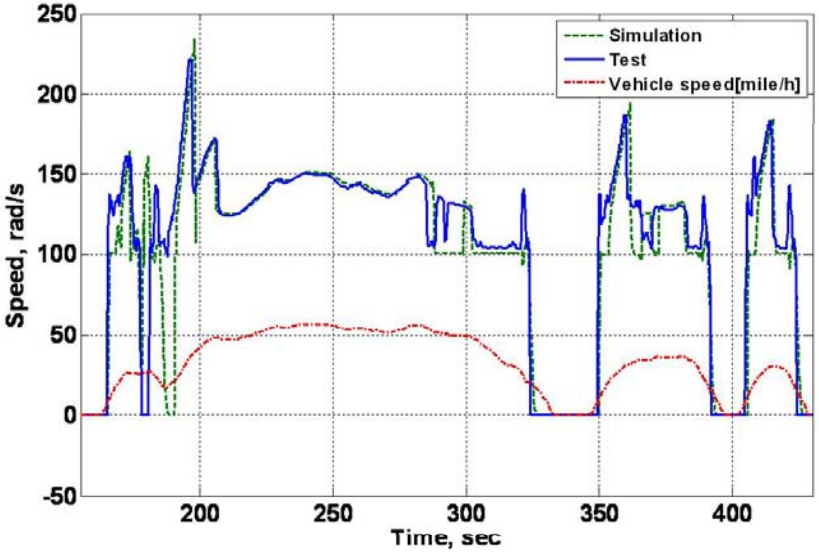

Engine Torque

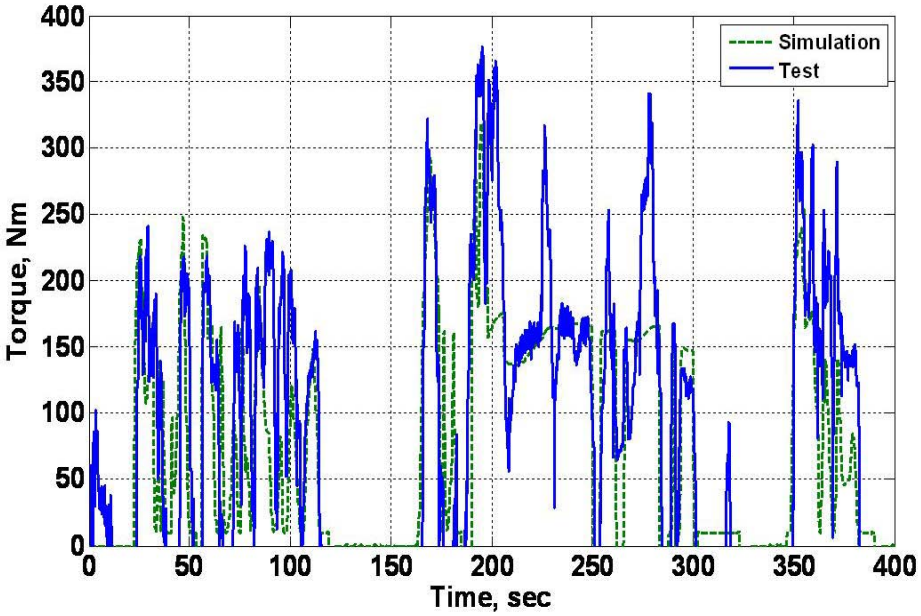

APRF Test Data

Regenerative Braking Comparison

Motor 1 - UDDS

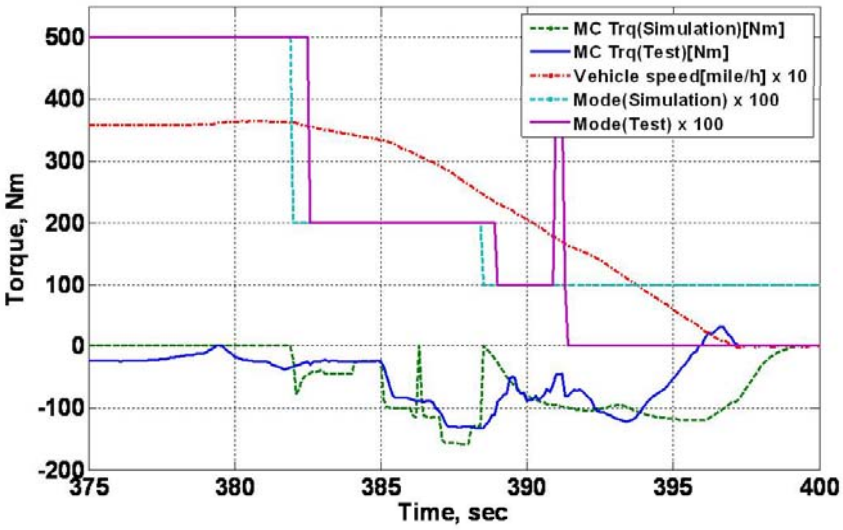

Motor 2 - UDDS

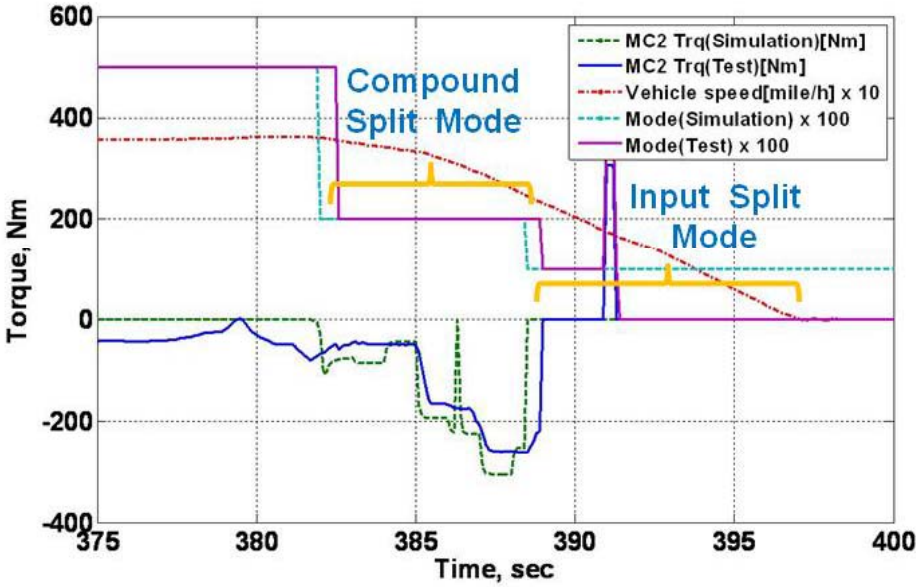

APRF Test Data

Conclusion

- Transmission model of the RWD 2 Mode model integrated into PSAT.
- High level rule based control strategy developed.
- Mode selection and component operating conditions were validated with test data.
- Future work includes developing physical model of the transmission (SimDriveline) and instantaneous optimization algorithm

Acknowledgements

Activity sponsored by **Lee Slezak** from the U.S. Department of Energy

U.S. Department of Energy
Energy Efficiency and Renewable Energy
Bringing you a prosperous future where energy is clean, abundant, reliable, and affordable

Further Information

www.transportation.anl.gov/modeling_simulation/PSAT/psat_technical_papers.html
www.transportation.anl.gov/facilities/aprf.html

Contact

- Namdoo Kim, nkim@anl.gov
- Aymeric Rousseau, arousseau@anl.gov
- Forrest Jehlik, fjehlik@anl.gov
- *Argonne National Laboratory, 9700 South Cass, Argonne IL 60439*

Argonne NATIONAL LABORATORY