Rapid Partitioning, Automatic Assembly and Multi-core Simulation of Distributed Vehicle Systems

Sylvain PAGERIT[1], Phil SHARER[1], Aymeric ROUSSEAU[1], Qinwei SUN[2], Mike KROPINSKI[2], Neville CLARK[3], James TOROSSIAN[3], Graham HELLESTRAND[4]

[1] Argonne National Laboratory, Lemont, USA, [2] General Motors, LLC, Milford, USA

[3] EST Embedded Systems Technology, P/L, Sydney Australia

[4] Embedded Systems Technology, Inc., San Carlos, USA

VEHICLE POWER AND PROPULSION CONFERENCE
OCTOBER 19-22, 2015 - MONTRÉAL, CANADA

Argonne NATIONAL LABORATORY

AUTONOMIE

Rapid Partitioning, Automatic Assembly and Multi-core Simulation of Distributed Vehicle Systems

October 19, 2015

Sylvain Pagerit, Phil Sharer, Aymeric Rousseau
Argonne National Laboratory

Qinwei Sun, Mike Kropinski
General Motors, LLC

Neville Clark, James Torossian
EST Embedded Systems Technology, P/L

Graham Hellestrand
Embedded Systems Technology, Inc.

U.S. Department of Energy
Energy Efficiency and Renewable Energy
Bringing you a prosperous future where energy is clean, abundant, reliable, and affordable

"This presentation does not contain any proprietary or confidential information"

U.S. DEPARTMENT OF ENERGY

Overview

- MBSE Brings New Level of Complex Models and Systems
- Distributing Systems to Optimize Computing Load
- Integrating Distributed Systems with Accurate Networks
- One Example Solution: Autonomie + ESSE
- Conclusion

Model Based System Engineering (MBSE) Brings New Level of Complex Models and Systems

Different Flavors of MBSE are currently used in the industry

Model Based Design (MBD)

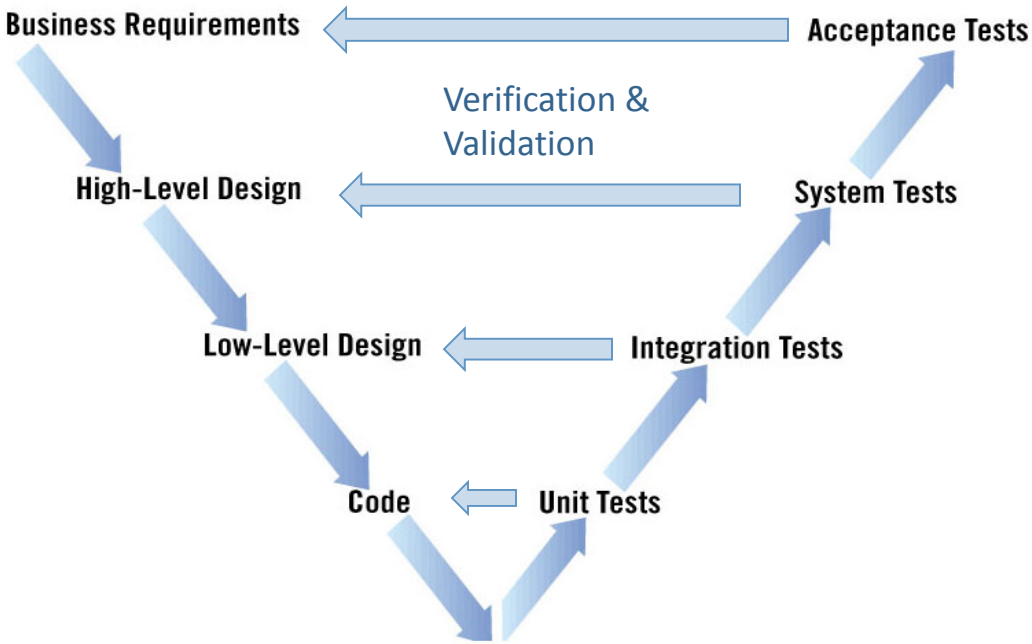

- V diagram
- Verification & Validation starts at the lowest level

Model Based Engineering (MBE)

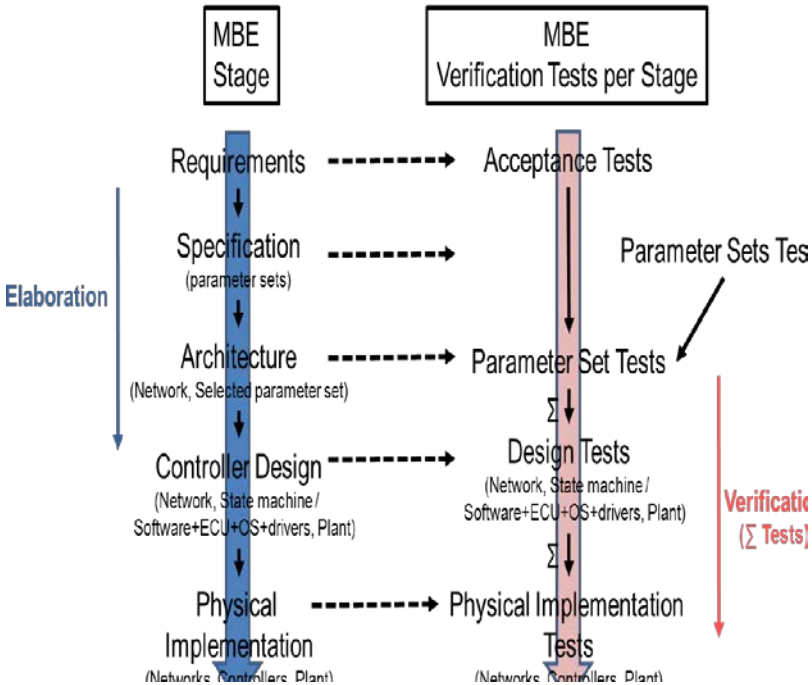

- Top down process
- Verification & Validation are performed in parallel

Complex Models in MBSE

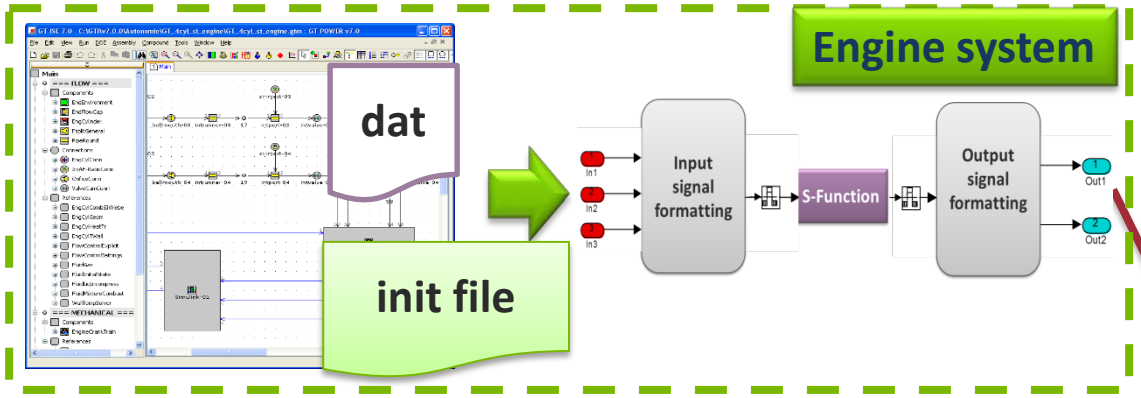

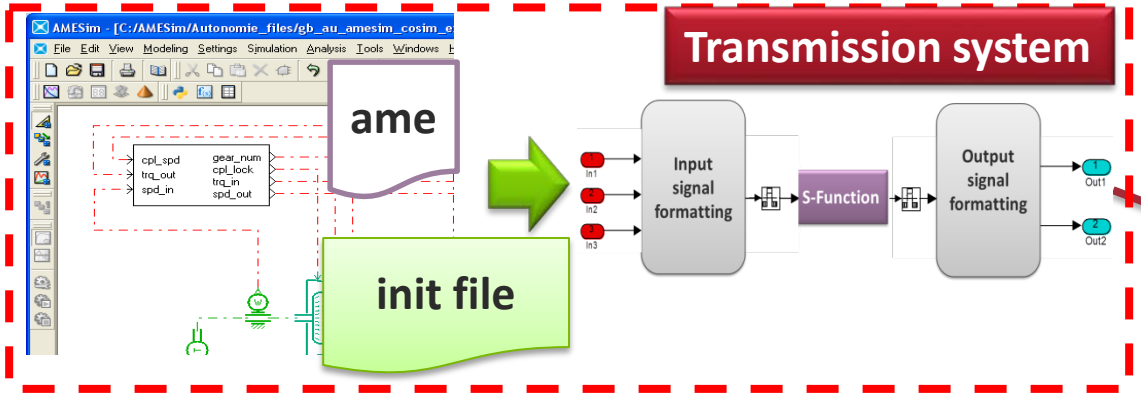

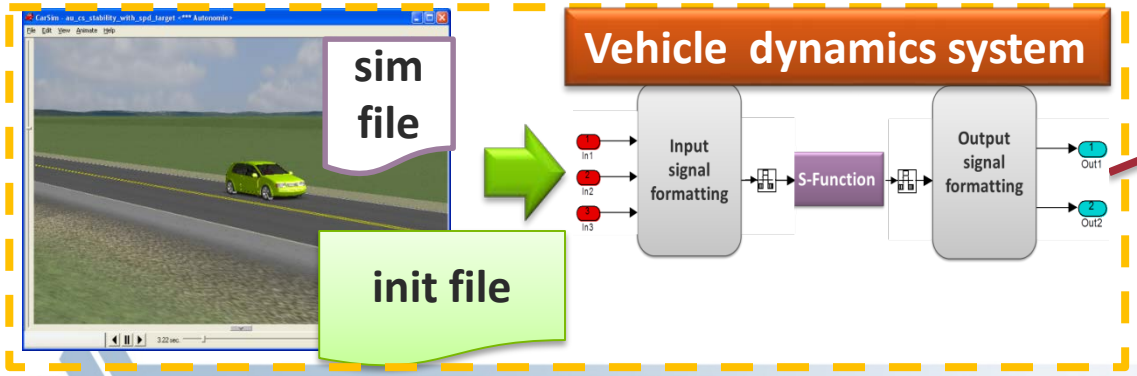

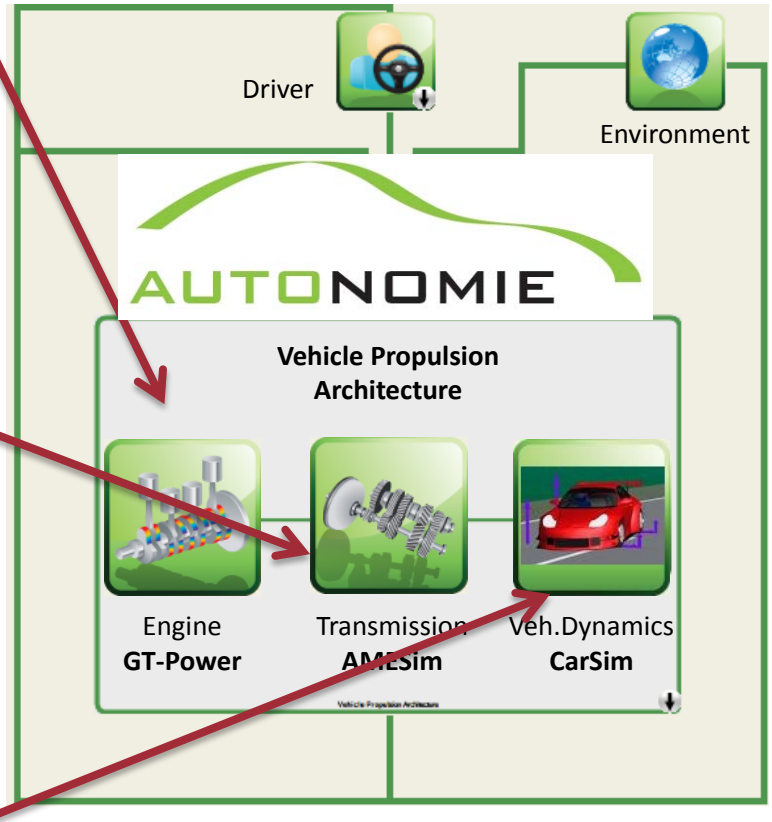

Complex Systems in MBSE

- Vehicle dynamics : CarSim
  - Define the road
  - Takes in torque from transmission
  - Speed feedback for driver
- Engine:
  - Simulink models for plant and control
  - Fuel data generated from GT Power
- Simulink models for the rest of the vehicle
- Systems integration with Autonomie:
  - GUI for model/system selection
  - Automatic model building
  - Enforce interface rules
  - Result analysis capabilities

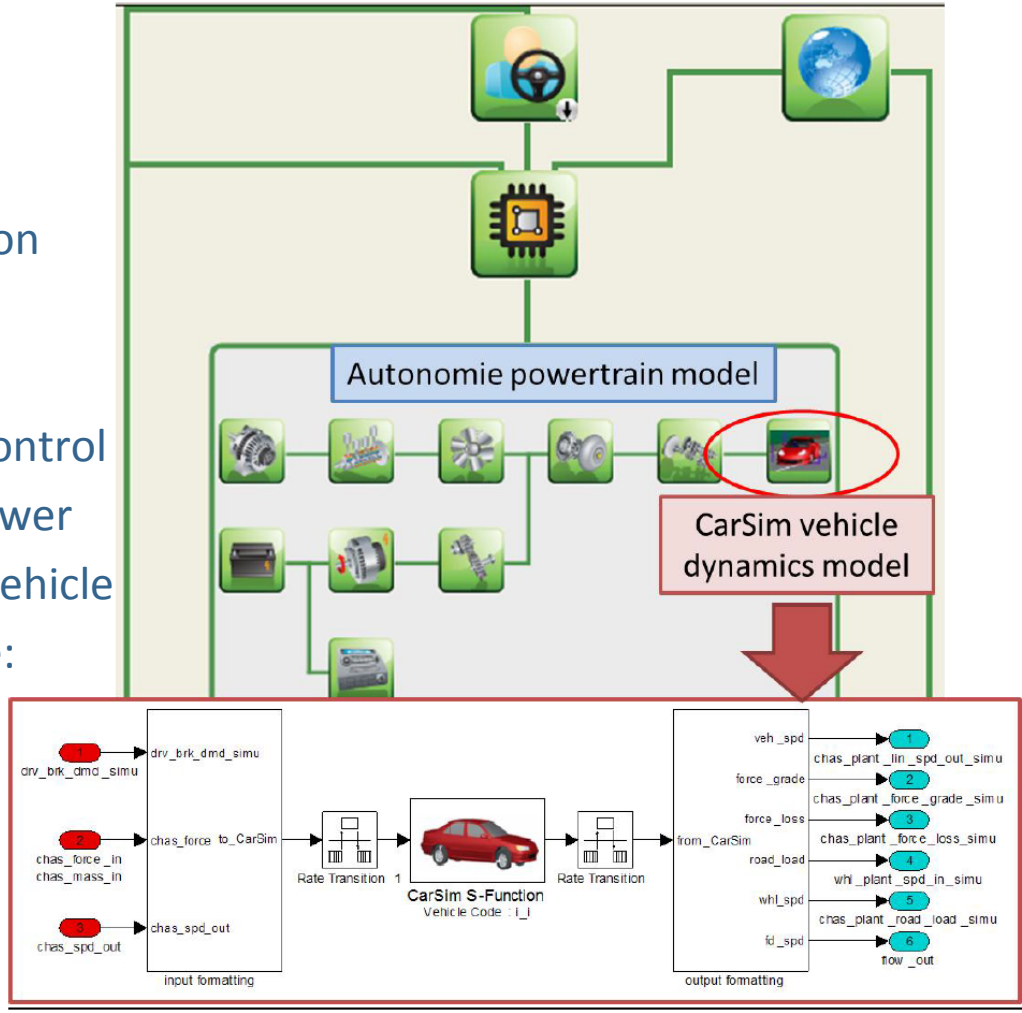

The Rise of Complex Models and Systems

- The combination of these tools and models, together with the increase in computation capability delivered by powerful computers, have enabled engineers to increase the fidelity of plant models and implement more complex controls

- Side-effect:

  ⇒ increased size and complexity of control models.

  ⇒ Increased simulation time and sub-optimal use of computing resources

- New need:
  - Easily distribute systems and models to optimize the computing load, while ensuring accurate connectivity between the models.

Distributing Systems to Optimize Computing Load

Default system topology: component models are connected together via hierarchical networks in a single signal environment. Simulation performances are defined by the sequential evaluation of all the models.

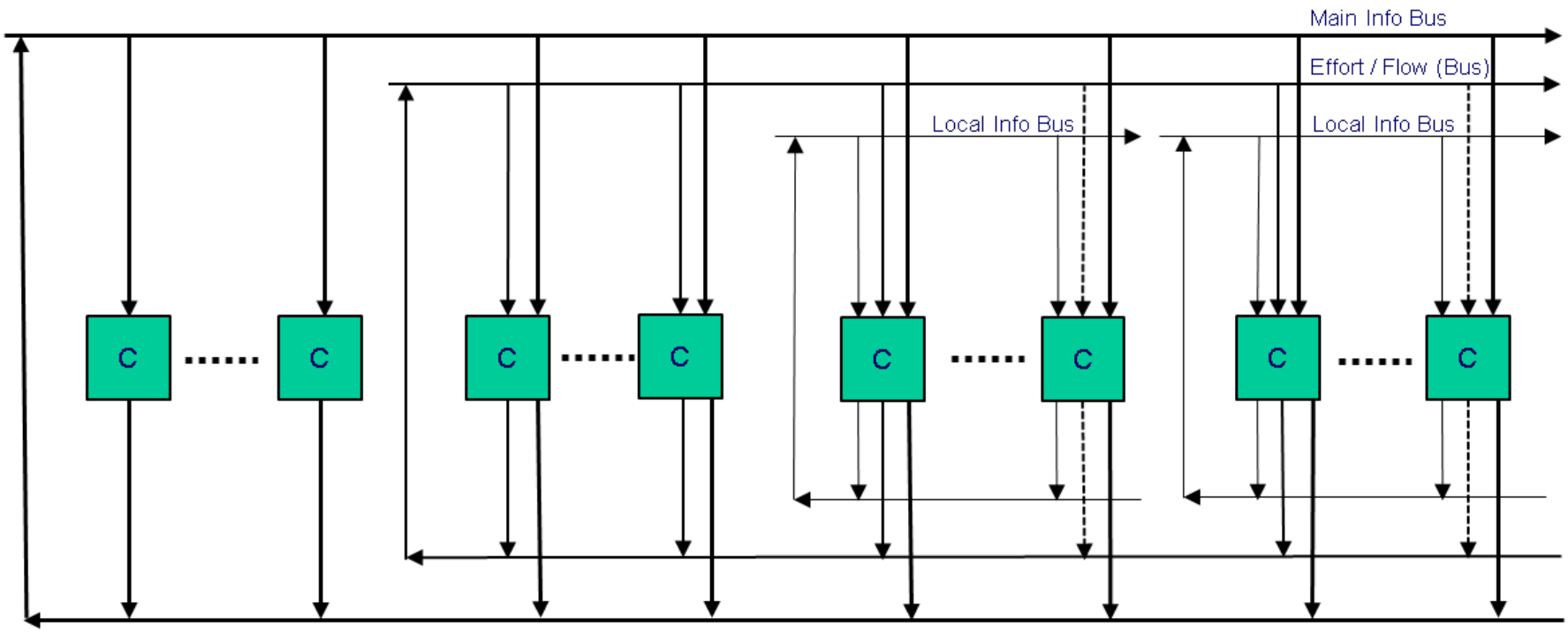

Distributing Systems to Optimize Computing Load

1 - Divide the models within the system into sampling domains

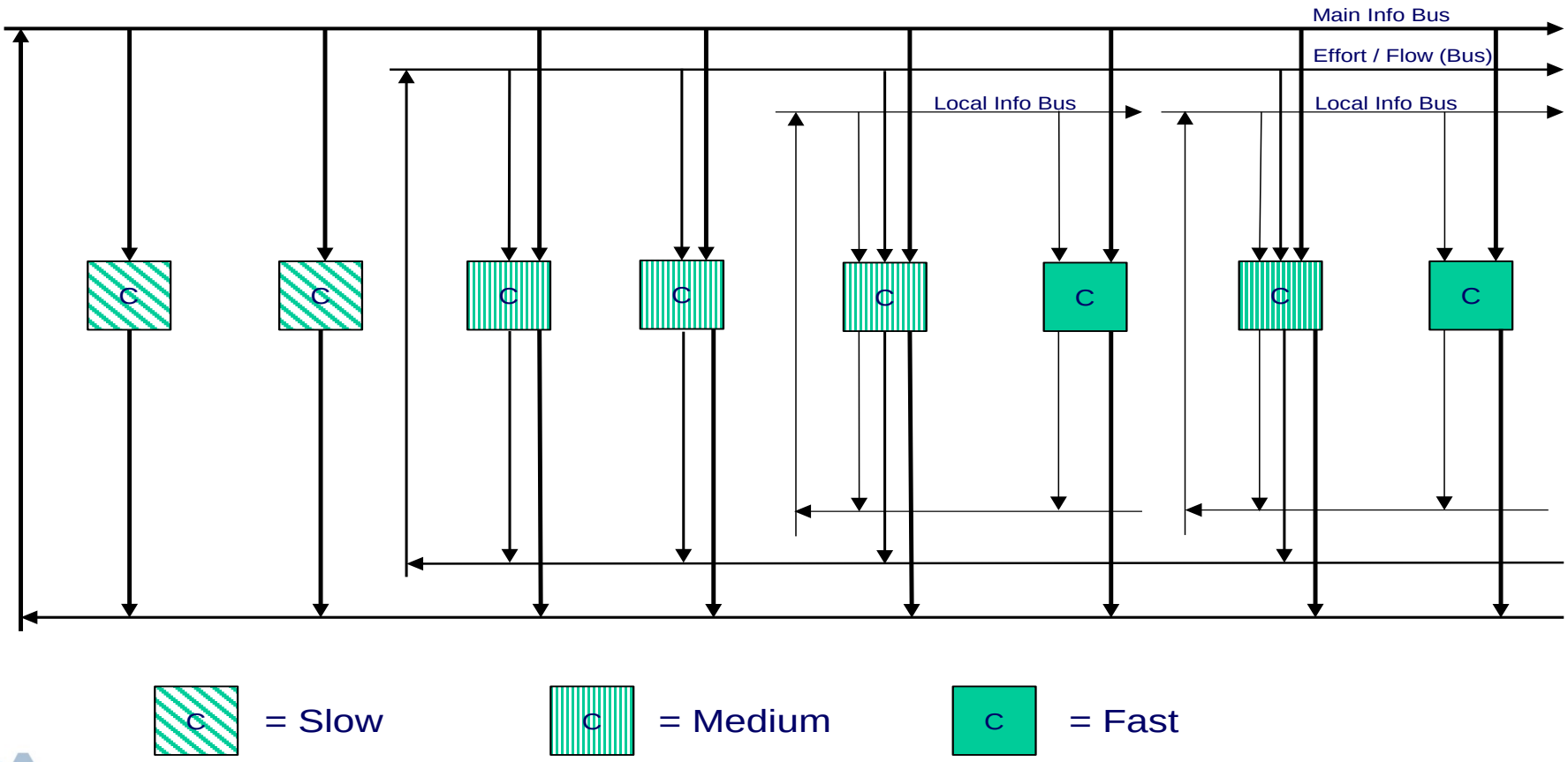

Distributing Systems to Optimize Computing Load

2 - Group the models of same sampling domains into modules to run in parallel, with their own solver properties (e.g.: fixed or variable fixed steps, different step sizes…). They can also be split in separate modules to optimize the computing load.

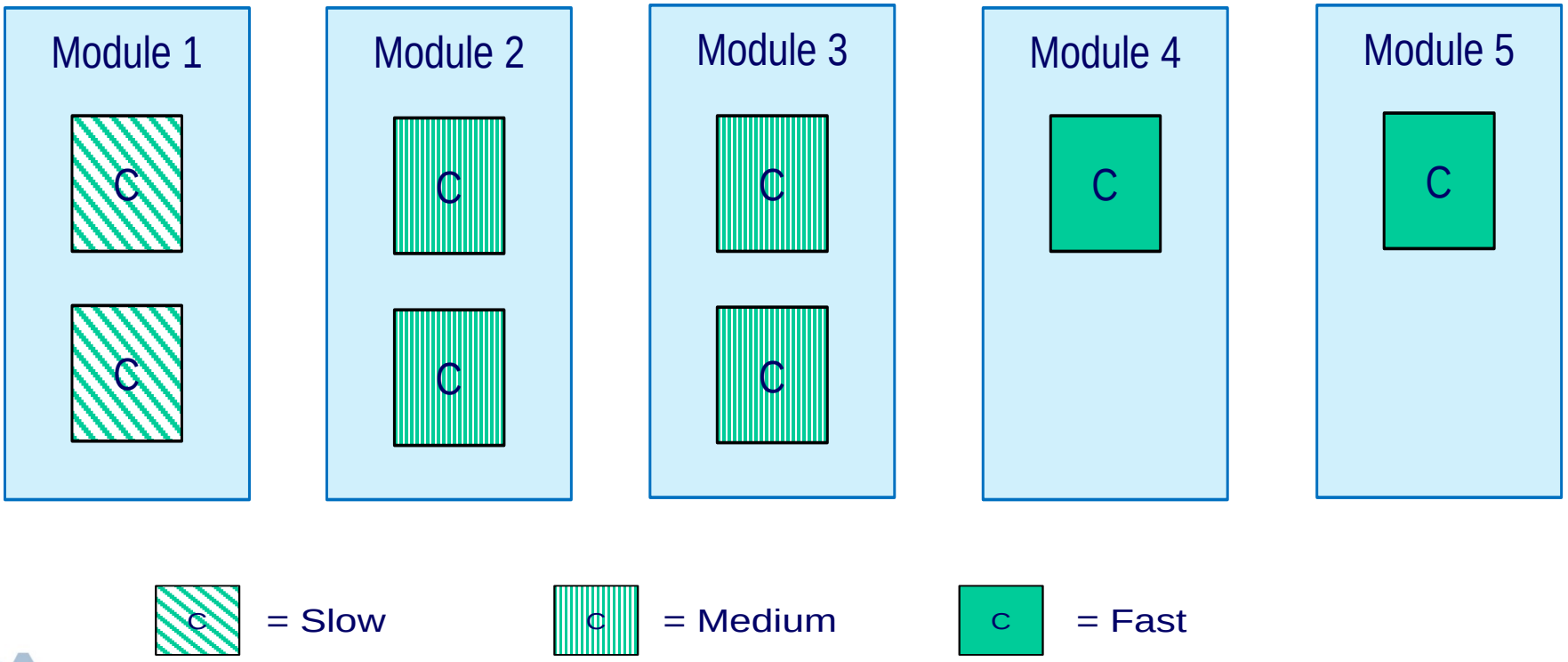

Distributing Systems to Optimize Computing Load

3 - Connect modules via buses (networks) with different sampling rates

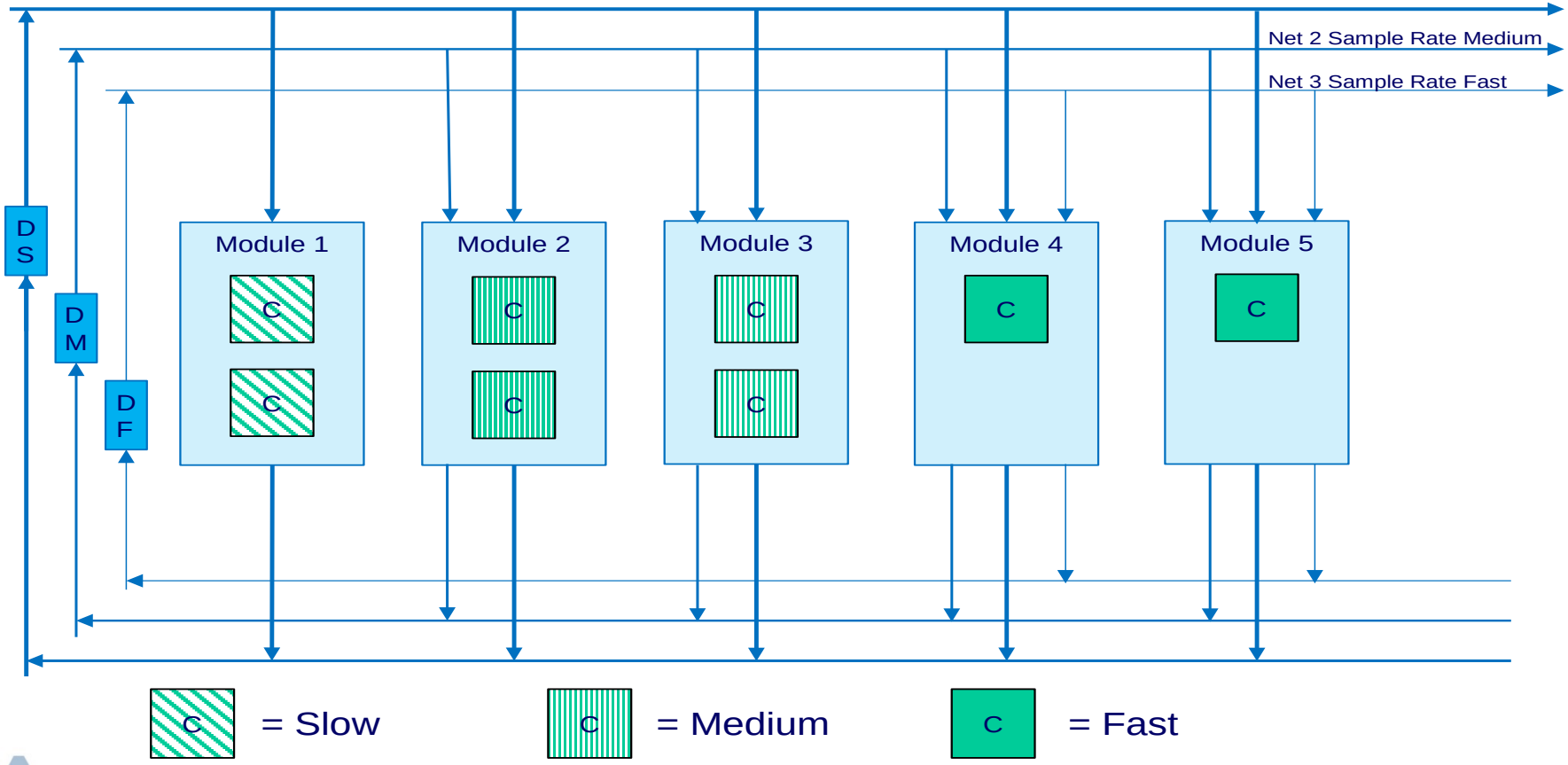

Linking Distributed Systems via Accurate Networks

Linking system integration + accurate network modeling + fast distributed simulation

BEST OF THREE WORLDS

IF the following constraints can be met

1. The network models connecting all the modules have the following attributes:
   - Accuracy in timing, function and structure
   - High simulation performance

2. Modules need the ability to use either:
   - Variable rate solvers, or
   - Fixed rate solvers

Linking Distributed Systems via Accurate Networks

3. A model communication capability which enables:
   - Parallel communication networks that transfer information between modules at different sampling rate.
   - Parallel execution of the network-connected modules at different sampling rate, and, if possible, on separate cores.

4. This process will be highly effective when engineers have the flexibility to easily:
   - Define or modify the system topology as wanted, i.e.: how many modules to run in parallel and which models to group together into modules
   - Specify the different properties of the modules and networks (connections) used to communicate between them (for instance, sampling rate, name…)
   - Define and validate the properties of all connections between the individual models and modules containing them
   - All the interactions between the tools required for this process are handled automatically in the background

One Example Solution: Autonomie + ESSE

Autonomie:

- Easily define distributed systems topology
- Automated handling and verification of model and module connections
- Easily define simulation properties
- Automated model building and simulation
- Designed to interact with other tools

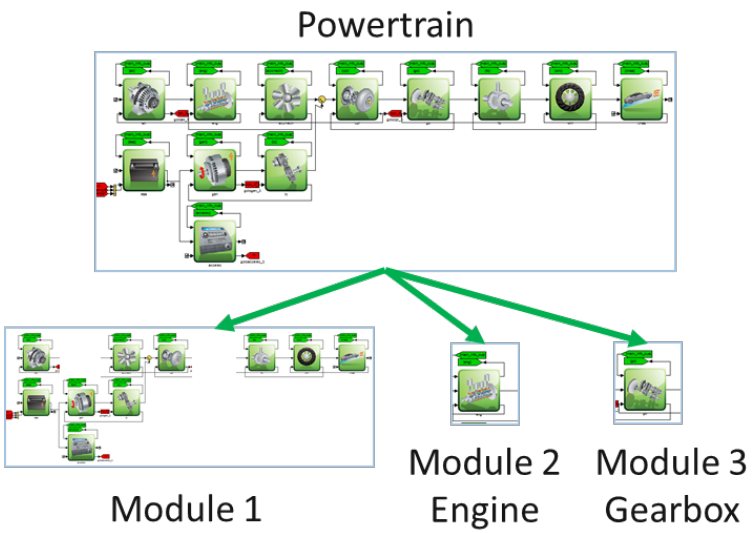

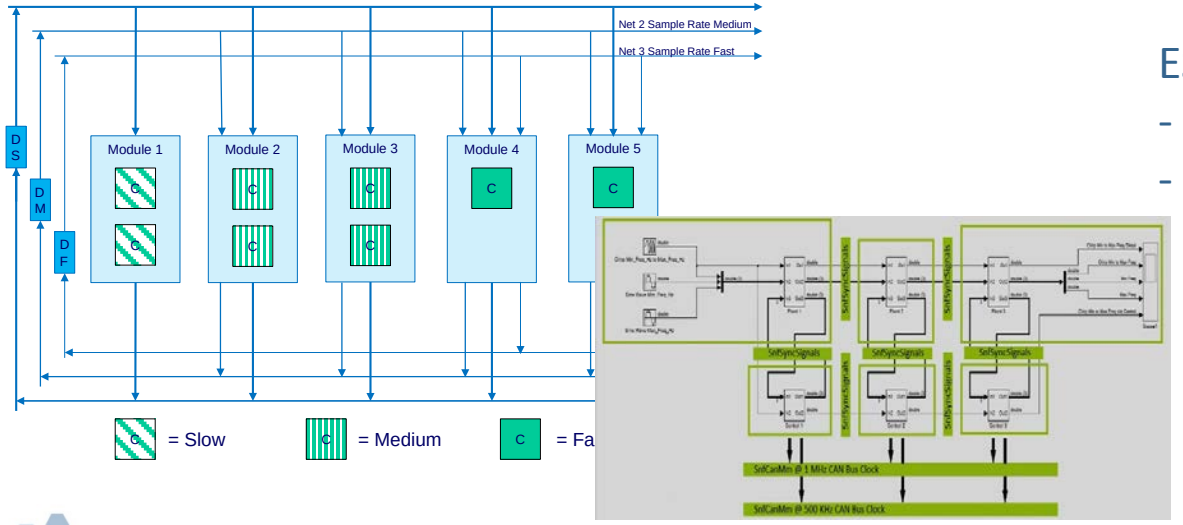

ESSE:

- Distributed simulation engine
- System Network Fabric technology with high performance accurate network (CAN, Signals,…)

Build & run models automatically

- Automatic building saves time and avoid errors
- Automatic enforcement of interface rules & checks
- Post processing capabilities

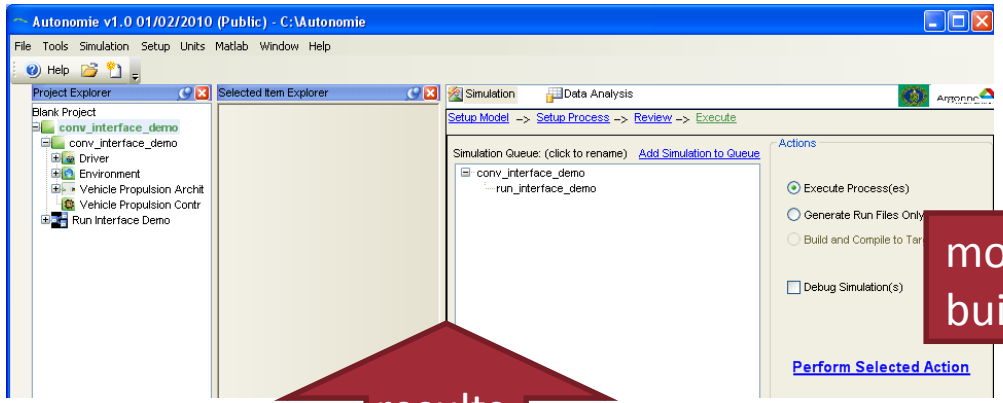

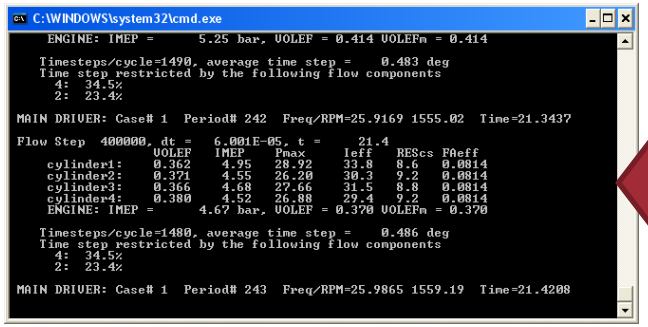

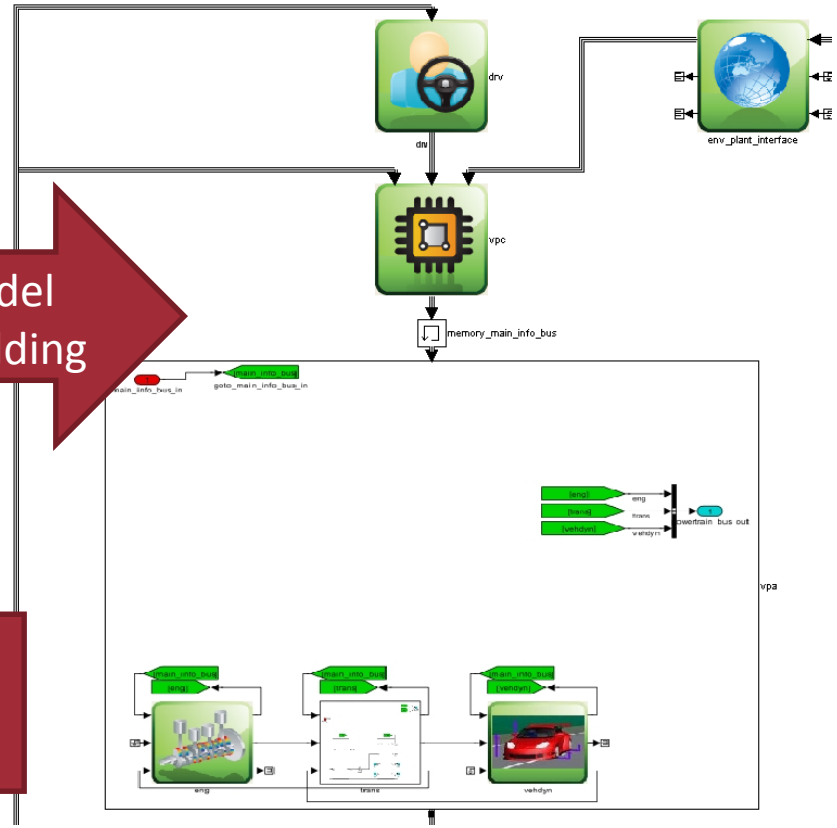

model building

results

Running external tools

Results

- Real World performances combining Simulink models, and achieved after testing different topology distributions for 3 hrs:

Simulation types	Simulation time		
	Decomposition	Original time	New Time
Vehicle 1, Simulink Only	GM System Model	16 times real time	1.07 times real time

- One can argue a distributed continuous plant model will not compute exactly the same response as its corresponding monolithic model
- However, the objective of modeling and simulation of physical systems is to produce an accurate system response to a prescribed set of inputs
- When monolithic models support signal interconnections to have physically appropriate latencies – rather than zero latencies as is typical in continuous domain models, then it will behaves identically to the monolithic model during simulation, except that the distributed one will likely execute considerably faster.

Conclusion

- System simulations have become a lot more complex and now often require the combinations of heterogeneous and multi-domain models.
- Reorganizing the system topology into distributed systems enables a nearer optimum selection of independent solver options and a better spread of the computing loads.
- This requires a way to accurately network all the model connections.
- We demonstrated how we successfully designed such a framework by combining the system integration features of Autonomie with the distributed simulation engine and network features of the ESSE Systems Engineering Workbench.